SOLATUBE M74 DS
(29 IN / 740 MM)
CURB CAP/THERMAL INSULATION PANEL
OPEN CEILING

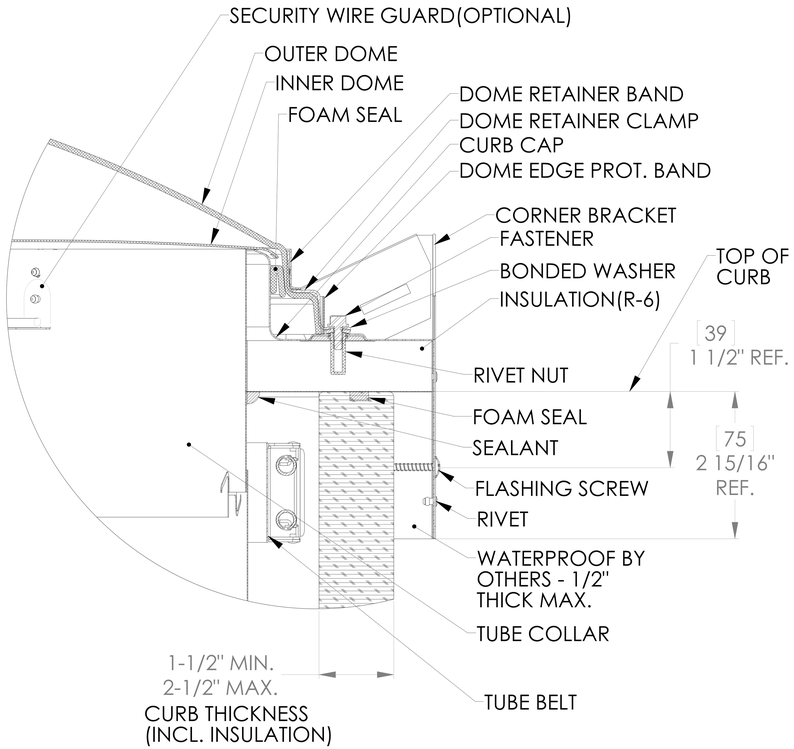

DETAIL B
SCALE 3 : 1

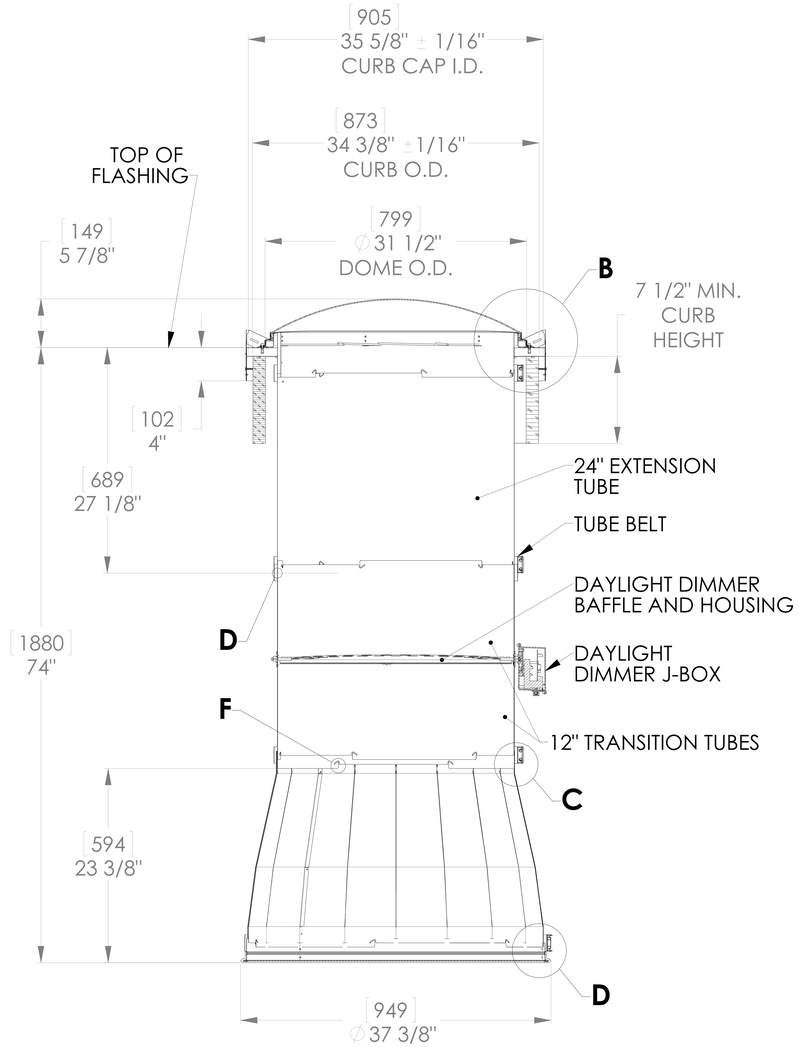

SECTION A-A

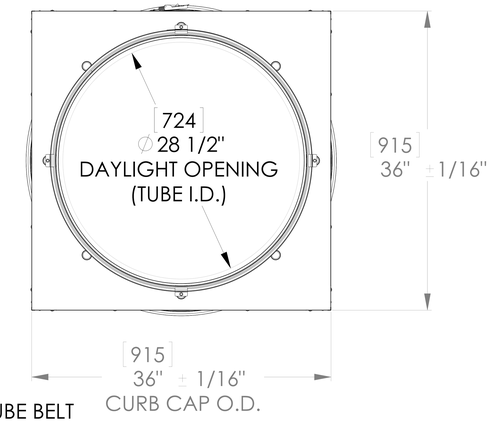

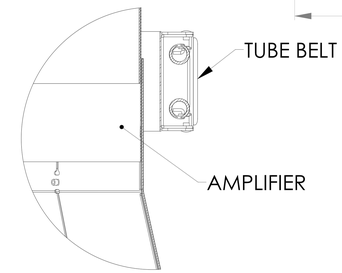

DETAIL C
SCALE 3 : 1

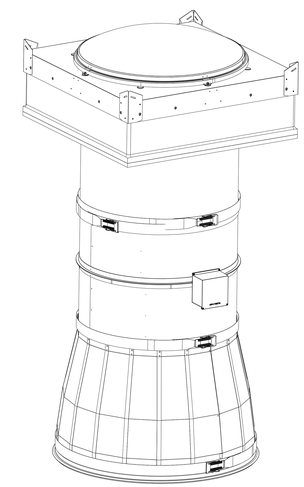

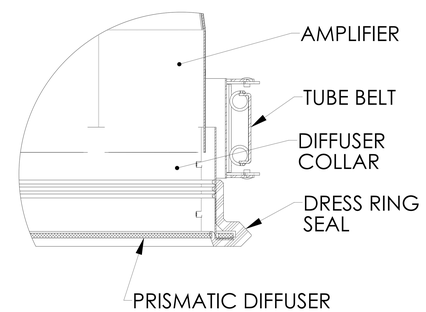

DETAIL D
SCALE 3 : 1

NOTES:

1. STRUCTURAL ELEMENTS (PLYWOOD, RAFTERS, DRYWALL ETC.) BY OTHERS & SHOWN FOR REFERENCE ONLY.
2. DIMENSIONS IN BRACKETS ARE METRIC UNLESS OTHERWISE SPECIFIED.
3. 6" MIN CLEARANCE SHOULD BE MAINTAINED FROM ALL SOLATUBE COMPONENTS AND OTHER PLENUM COMPONENTS.
4. CURB CORNER TO CORNER MEASUREMENT SHALL BE EQUIVALENT TO WITHIN 3/32".
5. INSTALL THERMAL INSULATION PANEL WITHIN INSULATION LAYER.

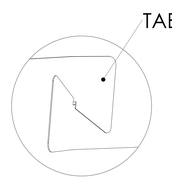

DETAIL E
SCALE 6 : 1

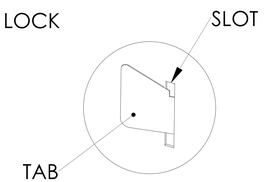

DETAIL F
SCALE 6 : 1

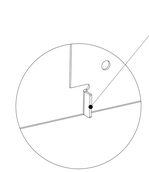

DETAIL D
SCALE 6 : 1

UNLESS OTHERWISE SPECIFIED: DIMENSION TOLERANCE FRACTIONS ± 1/4" INCH .X ± .1 .XX ± .06 MILLIMETER [.X] ± 2.5 [.XX] ± 1.5	SOLATUBE INTERNATIONAL, INC. COPYRIGHT 2015 WWW.SOLATUBE.COM	SOLATUBE 2210 OAK RIDGE WAY VISTA, CALIFORNIA 92081-8341 PH (760) 597-4400	
MATERIAL	DRAWN BY STEVENS	DATE 8/4/15	TITLE: M74 DS CURB MOUNT OPEN CEILING
FINISH	CHECKED BY --	DATE --	SIZE D / DWG. NO. SM74DS-0-DPPSGFC-E1-D1-A-L2-I / REV 2
DO NOT SCALE DRAWING	APPROVED BY --	DATE --	SCALE: 1:1 / SHEET 1 OF 1